BL-M8812EU2

802.11ac 867Mbps High-Power WLAN USB 2.0 Module Specification

SHENZHEN BILIAN ELECTRONIC CO., LTD

Add: 10~11/F, Building 1A, Huaqiang idea park, Guangming district, Shenzhen. Guangdong, China

Web: www.b-link.net.cn

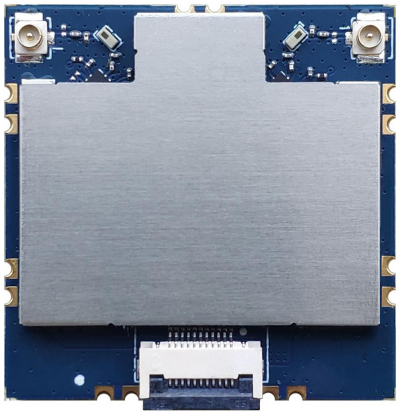

(Top View)

(Bottom View)

Module Name: BL-M8812EU2	
Module Type: 802.11a/n/ac 867Mbps High-Power WLAN USB 2.0 Module	
Revision: V1.0	
Customer Approval:	
Company:	
Title:	
Signature:	Date:
B-link Approval:	
Title:	
Signature:	Date:

Revision History

Revision	Summary	Release Date	Revised By
0.1	Initial release	2023-10-05	Fnz
1.0	Official release	2023-10-27	Drq

1. Introduction

BL-M8812EU2 is a highly integrated 5G single band high-power wireless module base on RTL8812EU, which combines a USB interface, a WLAN MAC, a 2T2R capable Base Band and Radio. It supports IEEE 802.11a/n/ac standard and provides the highest PHY rate up to 867Mbps. The module has built-in high-power FEM and supports 10MHz narrow bandwidth channel, significantly extending the WLAN communication distance, ideal for long-range wireless video transmission applications such as IP camera and UAV.

1.1 Features

- Operating Frequency: 5.15~5.85GHz
- IEEE Standards: IEEE 802.11a/n/ac
- Support 2T2R mode with 10/20/40/80MHz bandwidth
- WLAN PHY rate can reach up to 867Mbps
- Connect to external antennas through IPEX connectors
- Host Interface is USB 2.0
- Single DC 5V Power Supply

1.2 Block Diagram

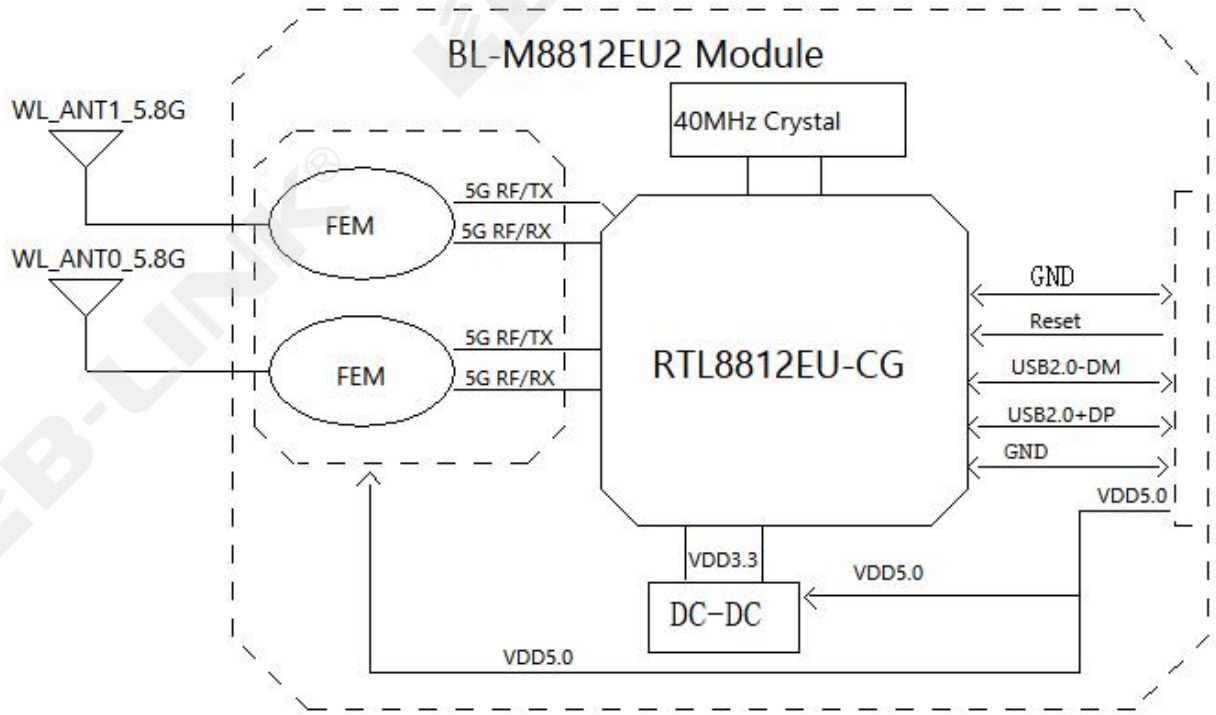

1.3 General Specifications

Module Name	BL-M8812EU2
Chipset	Realtek RTL8812EU-CG
WLAN Standards	IEEE 802.11 a/n/ac
Host Interface	USB 2.0
Antenna	Connect to the external antenna through IPEX connectors
Dimension	32.0*32.0*3.5mm (L*W*H)
Power Supply	DC 5.0V±0.25V @1800mA (Max)
Operation Temperature	-20℃ to +70℃
Operation Humidity	10% to 95% RH (Non-Condensing)

2. Pin Assignments

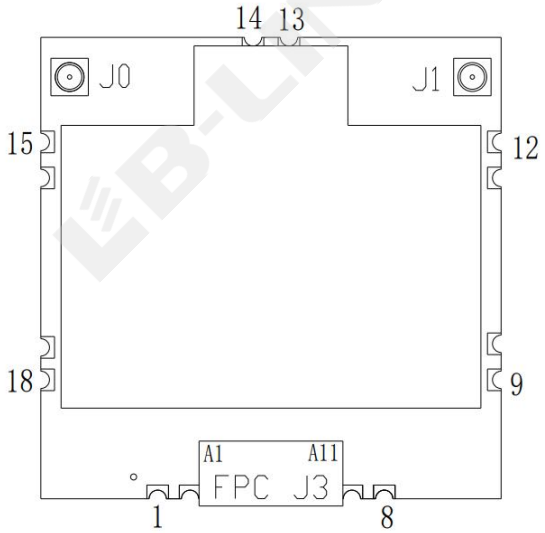

(Top View)

2.1 Pin Definition

No.	Pin Name	Type	Level	Description
SMT LCC Pin Definition (PIN1~PIN18)				
1	GND	P		Ground connections
2	USB2.0+DP	AI/O		USB Transmitter/Receiver Differential Pair+

3	USB2.0-DM	AI/O		USB Transmitter/Receiver Differential Pair-
4	GND	P		Ground connections
5	RESET	I	3.3V	Reset active low input，this Pin can externally shutdown/reset the Module，internal pull high by 47K resistor
6	VDD5.0	P		DC 5.0V power supply
7	VDD5.0	P		DC 5.0V power supply
8	GND	P		Ground connections
9	GND	P		Ground connections
10	GND	P		Ground connections
11	GND	P		Ground connections
12	GND	P		Ground connections
13	GND	P		Ground connections
14	GND	P		Ground connections
15	GND	P		Ground connections
16	GND	P		Ground connections
17	GND	P		Ground connections
18	GND	P		Ground connections
	J0	RF		5G RF to IPEX connector for WLAN_ANT0
	J1	RF		5G RF to IPEX connector for WLAN_ANT1
J3 FPC Connector Pin Definition ,The pins/pads with same name are connected				
A1	GND	P		Ground connections
A2	GND	P		Ground connections
A3	USB2.0+DP	AI/O		USB Transmitter/Receiver Differential Pair
A4	USB2.0-DM	AI/O		USB Transmitter/Receiver Differential Pair
A5	GND	P		Ground connections
A6	GND	P		Ground connections
A7	VDD5.0	P		DC 5.0V power supply
A8	VDD5.0	P		DC 5.0V power supply
A9	VDD5.0	P		DC 5.0V power supply
A10	VDD5.0	P		DC 5.0V power supply

A11	RESET	I	3.3V	Reset active low input, this Pin can externally shutdown/reset the Module, internal pull high by 47K resistor

P:Power, I:Input, O:Output, I/O:In/Output, RF: Analog RF Port AI/O: Analog In/Output; AI: Analog Input; AO: Analog Output;

3. Electrical and Thermal Specifications

3.1 Recommended Operating Conditions

Parameters		Min	Typ	Max	Units
Ambient Operating Temperature *		-20	25	70	℃
External Antenna VSWR		/	1.5	2	
Supply Voltage	VDD5.0	4.75	5.0	5.25	V

Notes: * This module built-in high-power FEMs will generate more heat, in order to ensure the module work stably within rated temperature range, additional heat dissipation devices must be added by customers. Ensure that the junction temperature of module chipset is within rated value: Tj<125℃.

3.2 Digital I/O DC Specifications

Symbol	Parameter	Min	Typ	Max	Units
VIH	Input High Voltage	2.0	3.3	3.6	V
VIL	Input Low Voltage	--	0	0.9	V
VOH	Output High Voltage	2.97	--	3.3	V
VOL	Output Low Voltage	0	--	0.33	V

3.3 Current Consumption

Conditions : VDD5.0 = DC 5.0V ; Ta : 25 ℃			
Use Case	VDD5.0 Working Current		
	Typ (I_{RMS})	Max (I_{Peak})	Units
WLAN Unassociated (Linux Platform Device and Driver)	113	123	mA
WLAN TX TCP throughput 300Mbps (Linux Platform Device and Driver)	643	920	mA

WLAN RX TCP throughput 300Mbps (Linux Platform Device and Driver)	359	916	mA
WLAN TX/RX TCP throughput 300Mbps (Linux Platform Device and Driver)	732	928	mA
11a 6Mbps TX @ 29dBm (1TX RF test)	649	952	mA
11a 6Mbps RX (1RX RF test)	208	250	mA
11a 54Mbps TX @ 23 dBm (1TX RF test)	407	780	mA
HT20 MCS0 TX @ 28 dBm (1TX RF test)	759	976	mA
HT20 MCS7 TX @ 23 dBm (1TX RF test)	410	780	mA
HT40 MCS0 TX @ 28 dBm (1TX RF test)	690	976	mA
HT40 MCS7 TX @ 22.5 dBm (1TX RF test)	367	708	mA
VHT 80MHz MCS0 TX @ 27 dBm (1TX RF test)	591	928	mA
VHT 80MHz MCS9 TX @ 21.5 dBm (1TX RF test)	340	696	mA
VHT 80MHz MCS9 RX (1RX RF test)	208	250	mA
HT20 MCS8 TX @ 27.5 dBm (2TX RF test)	927	1510	mA
HT40 MCS15 TX @ 22 dBm (2TX RF test)	486	1150	mA
VHT 80MHz MCS0 TX @ 26.5 dBm (2TX RF test)	464	1170	mA
VHT 80MHz MCS9 TX @ 21dBm (2TX RF test)	426	1040	mA
VHT 80MHz MCS9 RX (2RX RF test)	208	250	mA

4. WLAN RF Specification

Conditions: VDD5.0 = DC 5.0V; Ta : 25℃	
Features	**Description**
WLAN Standard	IEEE 802.11a/n/ac
Frequency Range	5.15~5.25GHz; 5.25~5.35GHz; 5.47~5.73GHz; 5.735~5.835GHz
Channels	Ch36~Ch48; Ch52~Ch64; Ch100~Ch140; Ch149~Ch165 (For 20MHz Channels)
Modulation	802.11a (OFDM): BPSK, QPSK, 16QAM, 64QAM; 802.11n (OFDM): BPSK, QPSK, 16QAM, 64QAM; 802.11ac (OFDM): BPSK, QPSK, 16QAM, 64QAM, 256QAM

Data Rate	802.11a: 6, 9, 12, 18, 24, 36, 48, 54Mbps; 802.11n (HT20): MCS0~MCS7(1T1R_SISO) 6.5~72.2Mbps; 802.11n (HT20): MCS8~MCS15(2T2R_MIMO) 13~144.4Mbps; 802.11n (HT40): MCS0~MCS7(1T1R_SISO) 13.5~150Mbps; 802.11n (HT40): MCS8~MCS15(2T2R_MIMO) 27~300Mbps; 802.11ac (VHT20): MCS0~MCS8(1T1R_SISO) 6.5~86.7Mbps; 802.11ac (VHT20): MCS0~MCS8(2T2R_MIMO) 13~173.3Mbps; 802.11ac (VHT40): MCS0~MCS9(1T1R_SISO)13.5~200Mbps; 802.11ac (VHT40): MCS0~MCS9(2T2R_MIMO)27~400Mbps; 802.11ac (VHT80): MCS0~MCS9(1T1R_SISO)29.3~433.3Mbps; 802.11ac (VHT80): MCS0~MCS9(2T2R_MIMO)58.5~866.7Mbps
Frequency Tolerance	≦ ±20ppm

Transmitter Specifications (WLAN_ANT0 & WLAN_ANT1) Module TX power of some rates is calibrated, customers can define the target TX power of other rates by modifying configuration file of the Linux driver . Customers must define the TX power same or lower than recommended Target TX Power as below!

TX Rate	TX Power	TX Power Tolerance	EVM
802.11a @ 6Mbps	Recommended Target TX Power :29 dBm	± 2 dBm	≦ -9 dB
802.11a @ 54Mbps	Calibrated TX Power :23 dBm	± 2 dBm	≦ -25 dB
802.11n @ HT20_MCS0	Recommended Target TX Power :28 dBm	± 2 dBm	≦ -9 dB
802.11n @ HT20_MCS7	Calibrated TX Power :23 dBm	± 2 dBm	≦ -28 dB
802.11n @ HT40_MCS0	Recommended Target TX Power :28 dBm	± 2 dBm	≦ -9 dB
802.11n @ HT40_MCS7	Calibrated TX Power :22.5 dBm	± 2 dBm	≦ -28 dB
802.11ac @ VHT80_MCS0	Recommended Target TX Power :27 dBm	± 2 dBm	≦ -9 dB
802.11ac @ VHT80_MCS9	Calibrated TX Power :21.5 dBm	± 2 dBm	≦-32 dB

Receiver Specifications (WLAN_ANT0 & WLAN_ANT1)

RX Rate	Min Input Level(Typ)	Max Input Level(Typ)	PER
802.11a @ 6Mbps	-96 dBm	-10 dBm	< 10%
802.11a @ 54Mbps	-79 dBm	-10 dBm	< 10%
802.11n @ HT20_MCS0	-96 dBm	-10 dBm	< 10%

802.11n @ HT20_MCS7	-77 dBm	-10 dBm	< 10%
802.11n @ HT40_MCS0	-93 dBm	-10 dBm	< 10%
802.11n @ HT40_MCS7	-74 dBm	-10 dBm	< 10%
802.11ac @ VHT80_MCS0	-90 dBm	-10 dBm	< 10%
802.11ac @ VHT80_MCS9	-65 dBm	-10 dBm	< 10%

5. Mechanical Specifications

5.1 Module Outline Drawing

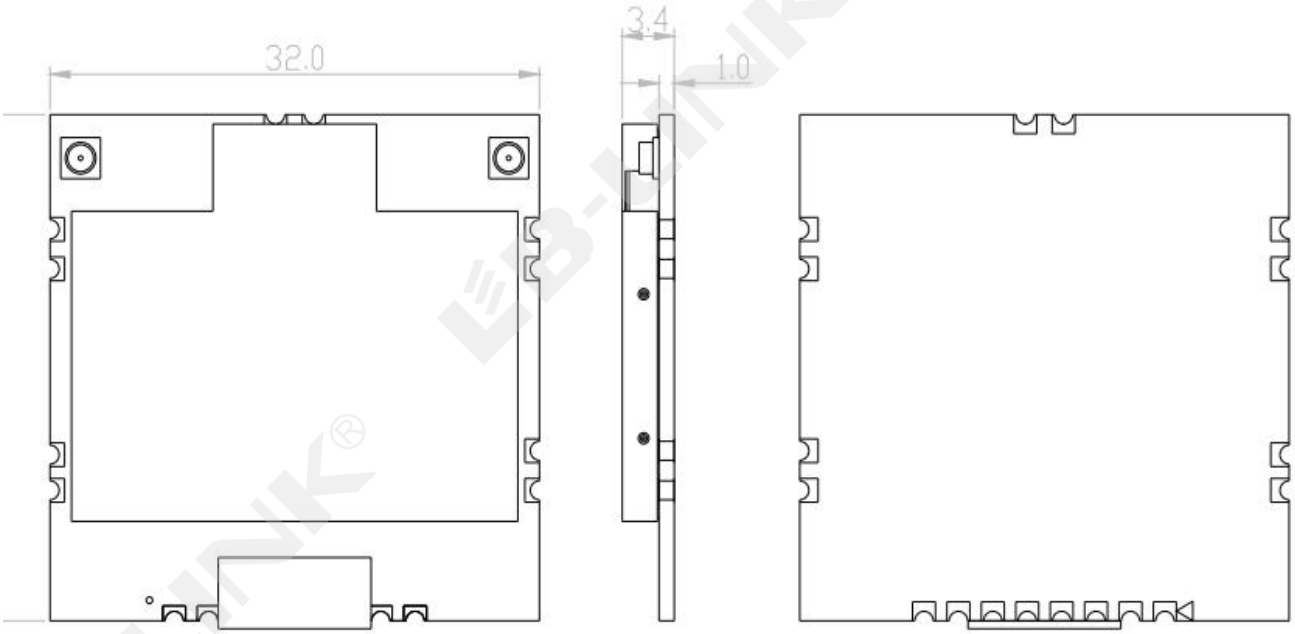

(Top View) (Side View) (Bottom View)

Module dimension: 32.0mm*32.0mm*3.4mm (L*W*H; Tolerance: ±0.3mm_L/W, ±0.2mm_H)

IPEX / MHF-1 connector dimension: 3.0*2.6*1.2mm (L*W*H, Ø2.0mm)

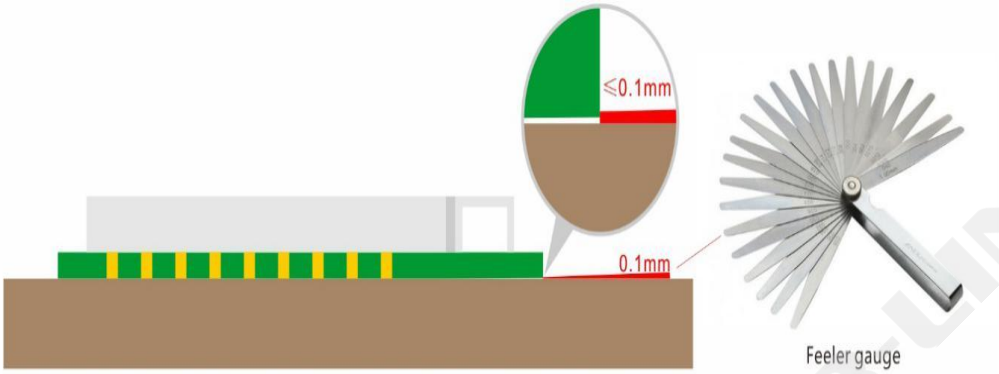

Module Bow and Twist：≤0.1mm

5.2 Mechanical Dimensions

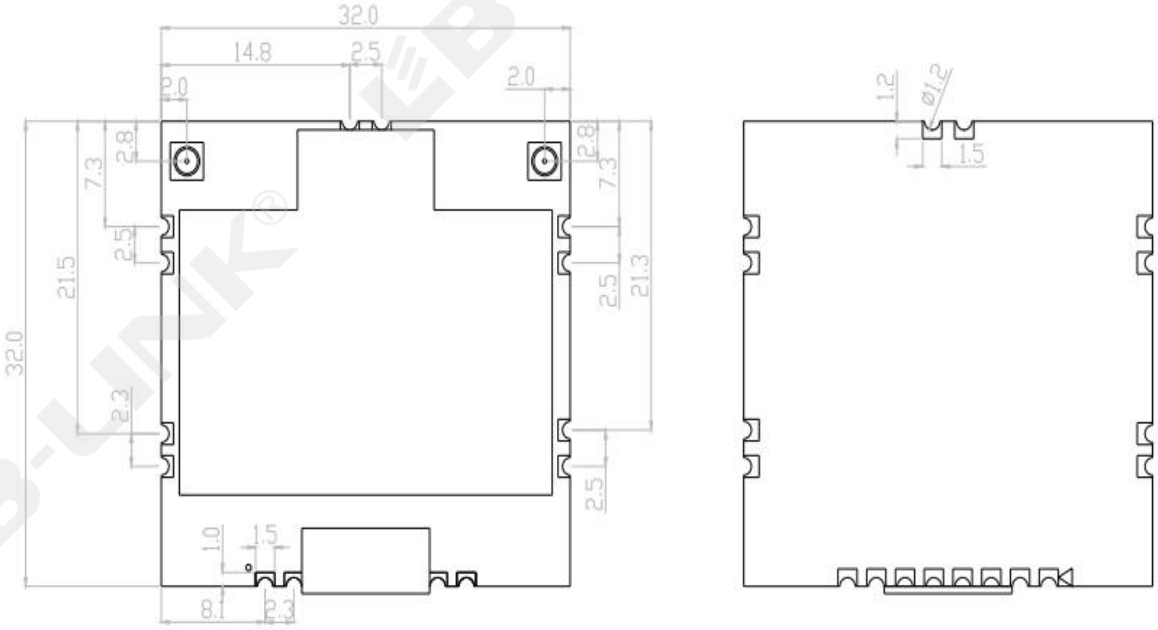

(Top View)

(Bottom View)

(Design Units:mm)

5.3 FPC Connector Mechanical Dimensions

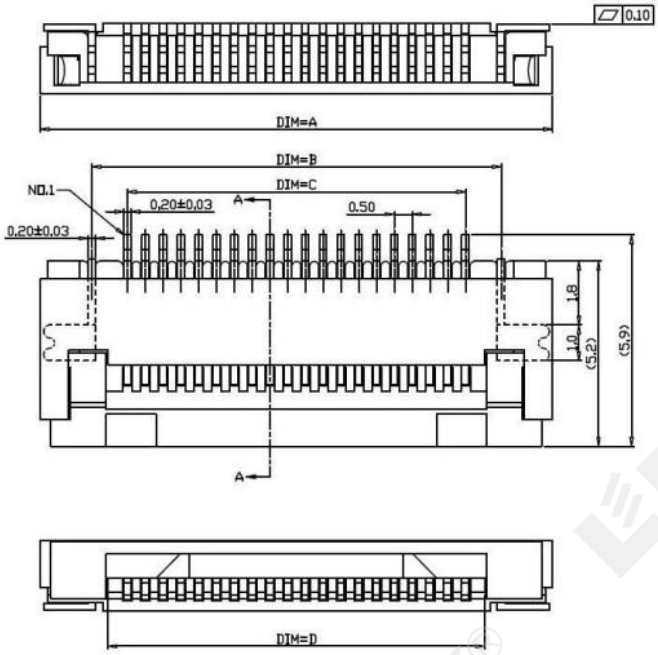

Pin=11

A=9.90
B=7.00
C=5.00
D=6.10

(Design Units:mm)

6. Application Information

6.1 Typical Application Block Diagram

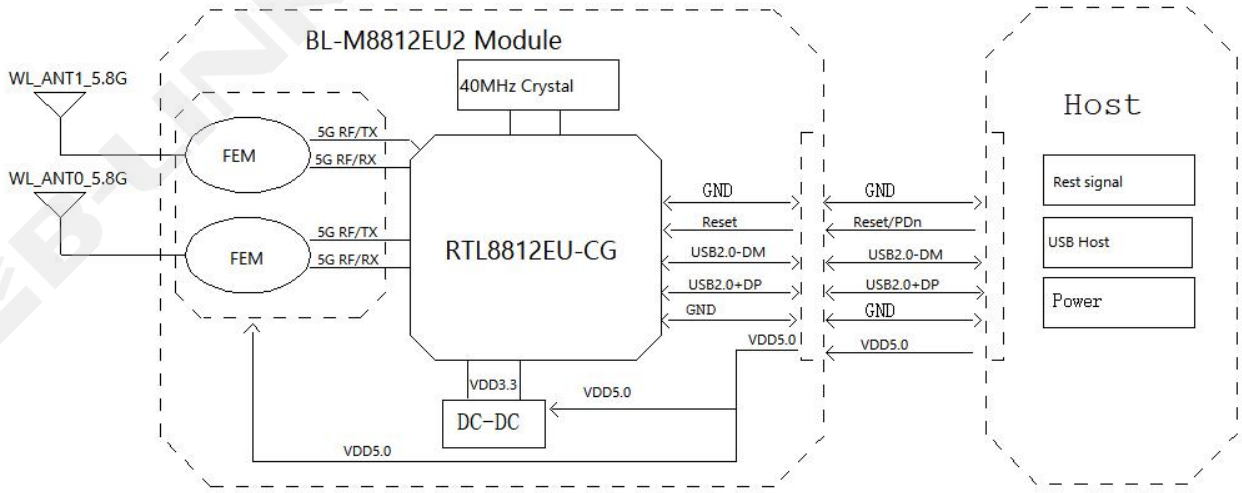

6.2 HW Application Note

6.2.1 Power requirement

Power Supply Voltage: DC 4.75~5.25V & Ripple Voltage <200mV; Peak current ≥1800mA; For achieve fast transient response, a current mode buck converter DC/DC recommended.

6.2.2 USB interface design guidelines

A. Route the USB signal traces as differential pairs with ground surrounded. Route the USB signal pairs as short as possible, avoid interference from Power and other signals.
B. The USB high speed differential pair should be maintain 90±5 Ω differential impedance.
C. ESD protection device should be added to the module USB data line, and the equivalent cap acitance value of the ESD protection TVS is less than 1pF.

6.3 Recommend PCB layout footprint

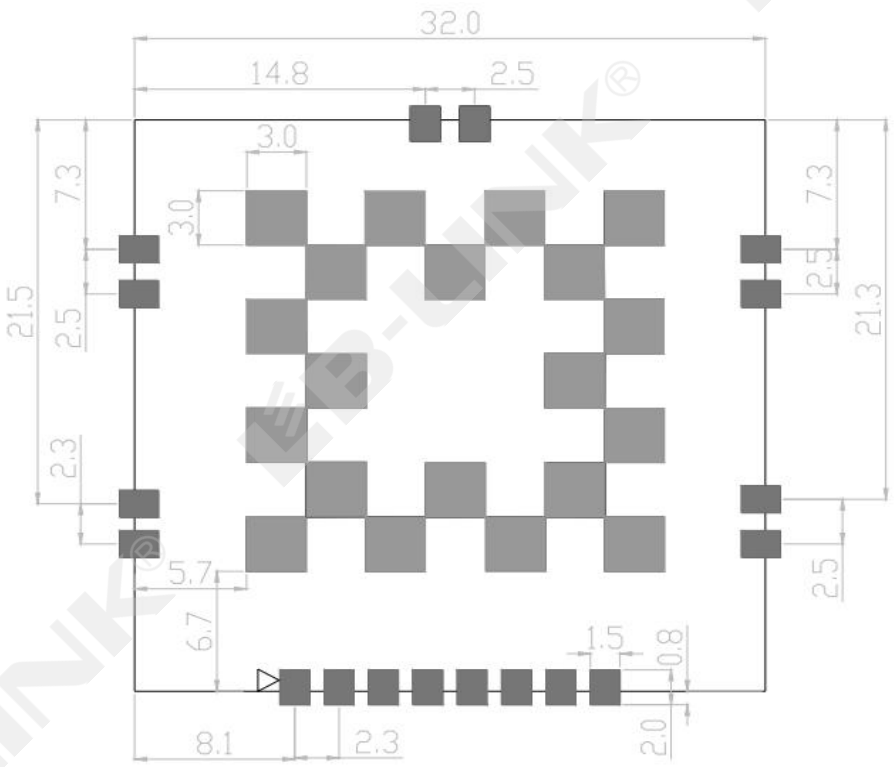

(Design Units:mm)

Notes: 3*3mm GND PAD area for heat dissipation are designed at the bottom of module.

Caution: BL-M8812EU2 module is not suitable for reflow soldering, as high temperature of soldering can damage the thermal conductive silicon pad between module's main chip and shielding cover!

6.4 Thermal Dissipation

This module is designed to work on an extreme temperature range (-20℃ to +70℃) , to make sure the module can work properly for a long time , long range and achieve a better performance on conditions like maximum power or high data transmission. Recommended to add thermally conductive pad (thermal conductivity 4W/mK, thickness<1.5mm) between the heat-sink and solder mask area of module for full heat conduction.

The heat sink recommended size ≧32*32mm, It is located directly below the module, gold-plated, The green area is Module place, The orange area is TCP (Thermal conductive silicone pad) ,The white area is aluminum-extruded heat-sink !

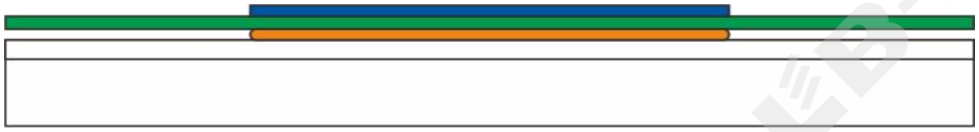

(Heat sink installed with Module)

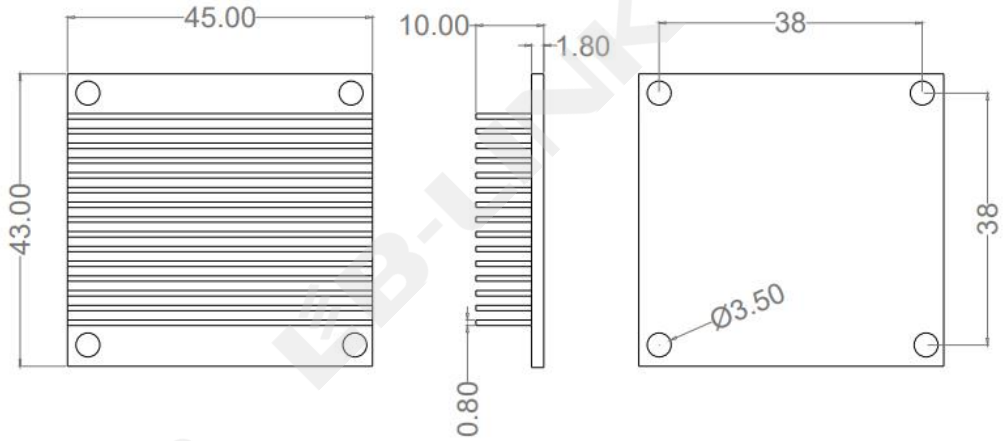

7. Key Components of Module

No.	Parts	Specification	Manufacturer	Note
1	Chipset	RTL8812EU-CG	Realtek Semiconductor Corp.	
2	PCB	BL-M8812EU2	SHEN ZHEN QILI ELECTRON CO.,LTD	
			Huizhou Dayawan Kexiang Technology Circuit Board Co., Ltd	
3	Crystal	40MHz-3225	Chengde oscillator Electronic Technology CO.,LTD	
			LUCKI CM ELECTRONICS CO.,LTD	
			JinHua East Crystal Electronic CO.,LTD	

8. Package and Storage Information

8.1 Package Dimensions

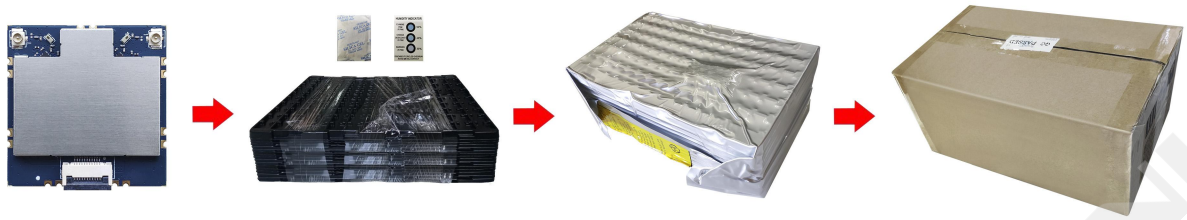

Package specification:

1. 40 modules per blister plate and 680 modules per box.
2. The blister is bound with wire membrane and put into anti-static vacuum bag.
3. Put 1 bag of dry beads (20g) and 1 humidity card in each anti-static vacuum bag.
4. The outer box size is 35.2*21.5*15.5cm.

8.2 Storage Conditions

Absolute Maximum Ratings:

Storage temperature: -40℃ to +85℃

Storage humidity: 10% to 95% RH (Non-Condensing)

Recommended Storage Conditions:

Storage temperature: 5℃ to +40℃

Storage humidity: 20% to 90% RH

Please use this module with in 12month after vacuum-packaged.

The module shall be stored without opening the packing.

After the packing opened, the Module shall be used within 72 hours.

When the color of the humidity indicator in the packing changed, the Module shall be baked before use.

Baking condition : 60℃, 24hours, 1time.

ESD Sensitivity:

ESD Protection: 2KV(HBM ,Maximum rating)

The Module is a static-sensitive electronic device.

Do not operate or store near strong electrostatic fields.

Take proper ESD precautions!

ESD CAUTION